GSLIDE

4261-00

PUSH-OPEN DRAWER SLIDE

Mounting	Side
Side Clearance	12.7mm +0.8/0
Height	45.5mm
Material	Steel
Load Rating	40kg at 18" (450mm)
Size	10" to 28" (250mm to 700mm)
Travel	Full Extension (Sizes 12" to 28")
Disconnect	Lever (Non-handed design)
Finish	Electro-Zinc plated with clear, yellow or black chromate

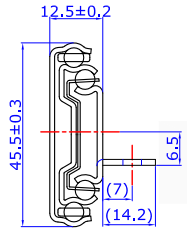

Profile

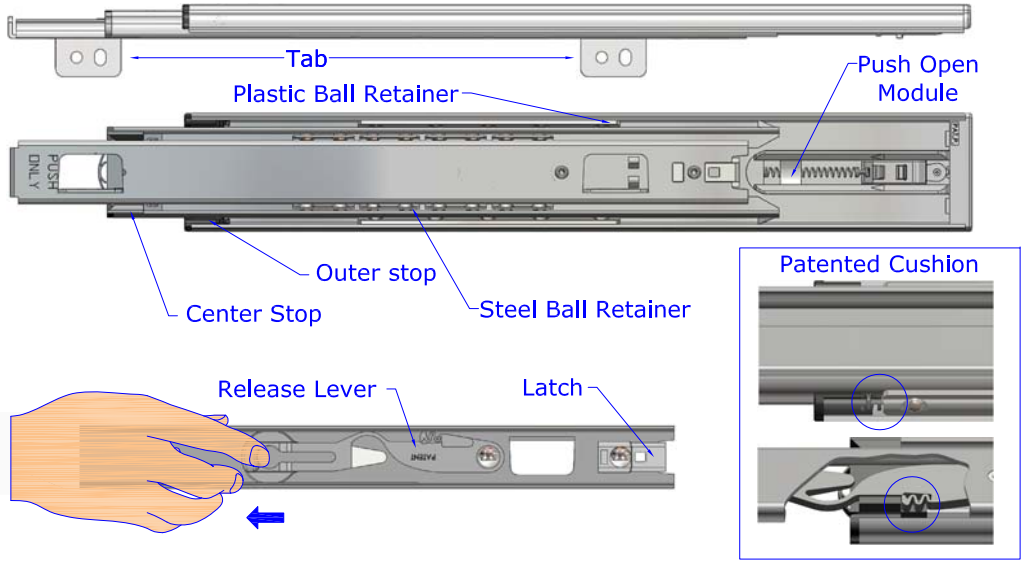

Slide Dimensions

All Dimensions are in Millimeters (mm)

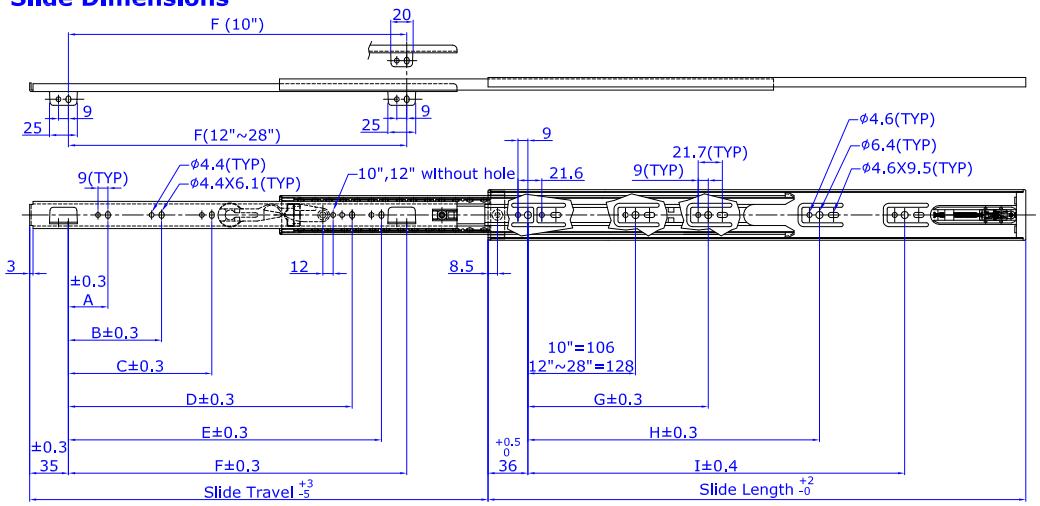

mm

SIZE	Slide Length	Slide Travel	Load Rating/Kg	A	B	C	D	E	F	G	H	I
10" (250)	250	238	15						156			
12" (300)	300	305	20						200			
14" (350)	350	356	30	96					250	192		
16" (400)	400	406	35	128					294	224		
18" (450)	450	457	40	96	160				344	288		
20" (500)	500	508	40	96	160	352			394	224	352	
22" (550)	550	559	35	128	192	384			444	224	352	
24" (600)	600	610	35	128	224	416			494	224	352	448
26" (650)	650	660	30	128	224	416	480		544	224	352	480
28" (700)	700	711	30	128	224	288	480	544	594	224	352	544

Drawer Slide Mounting Profile

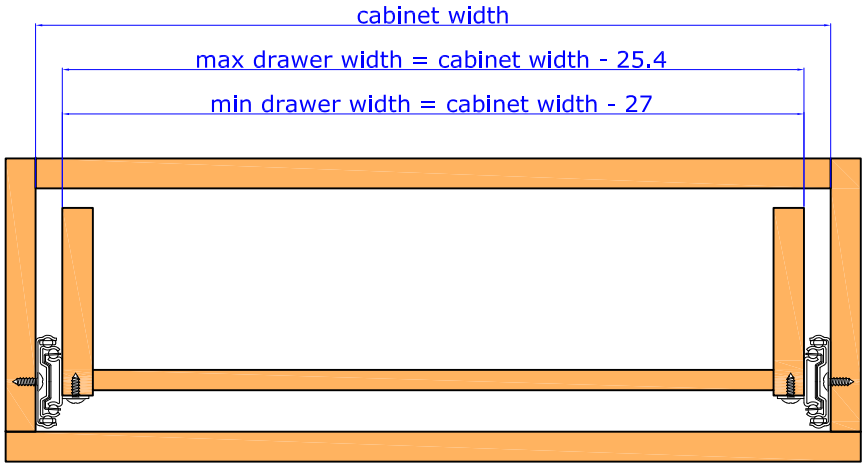

∗ max drawer width = slide length + 200 (mm)

APPLICATIONS:
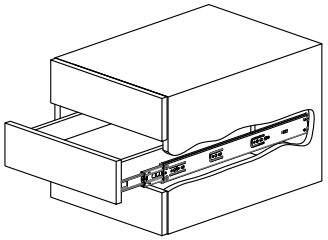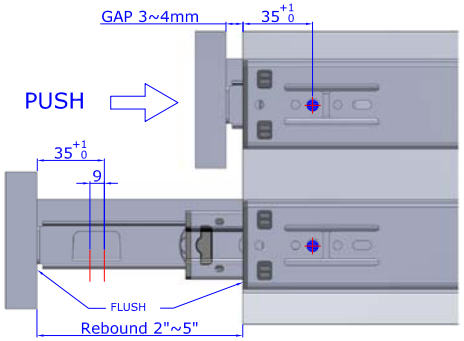
For use in wood pedestals, dresser, desk, casework, residential and kitchen cabinetry.