4560-00

PUSH-OPEN DRAWER SLIDE

Mounting	Side
Side Clearance	12.7mm +0.8/0
Height	45.5mm
Material	Steel
Load Rating	45 kg at 18" (450mm)
Size	10" to 28" (250mm to 700mm)
Disconnect	Lever (Non-handed design)
Finish	Electro-Zinc plated with clear, yellow or black chromate

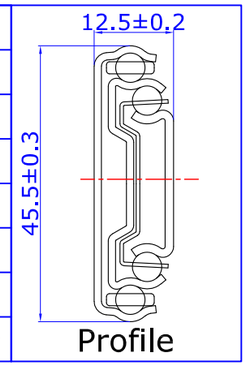

All Dimensions are in Millimeters (mm)

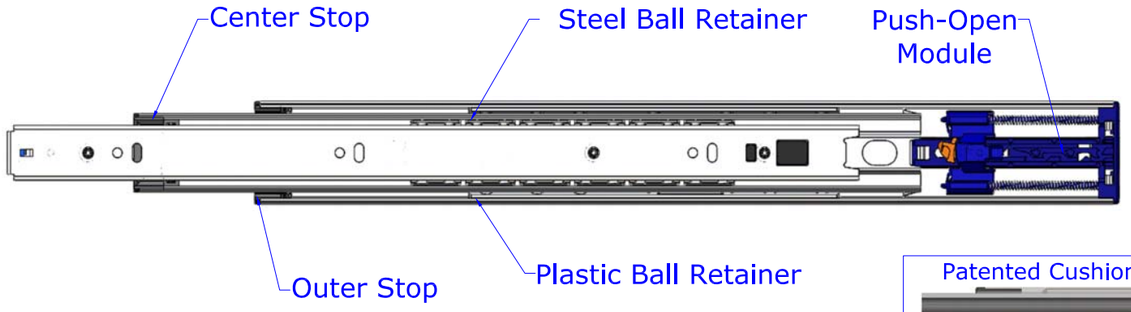

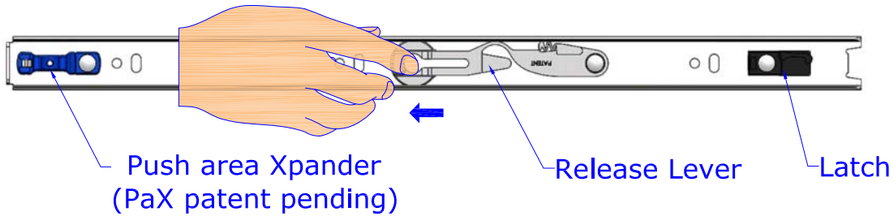

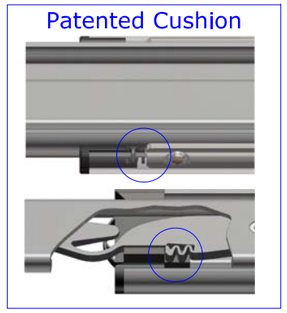

Slide Dimensions

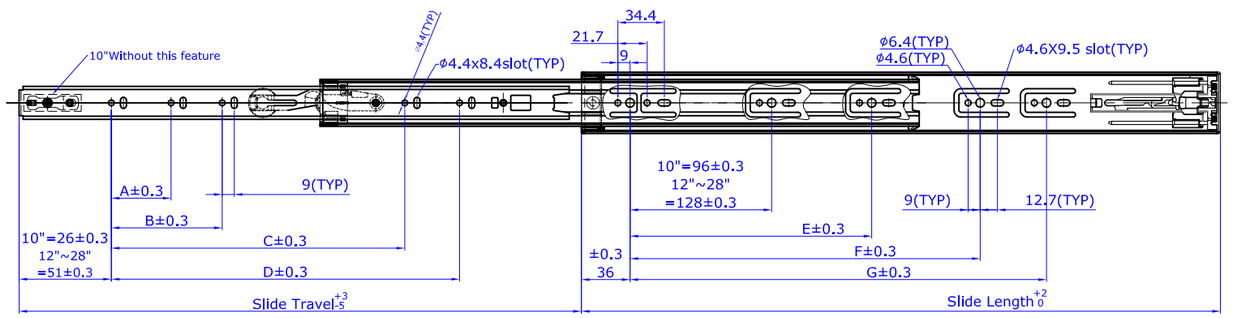

mm

SIZE	Slide Length	Slide Travel	Load Rating/Kg	A	B	C	D	E	F	G
10" (250)	250	237.5	20				152			
12" (300)	300	300	25				167			
14" (350)	350	350	35	71			217	192		
16" (400)	400	400	40	103			267	224		
18" (450)	450	450	45	103	277		317	256		
20" (500)	500	500	45	135	309		367	304		
22" (550)	550	550	40	103	167	359	417	256	352	
24" (600)	600	600	40	103	199	409	467	256	416	
26" (650)	650	650	35	103	199	459	517	256	352	464
28" (700)	700	700	35	103	199	509	567	256	384	512

Drawer Slide Mounting Profile

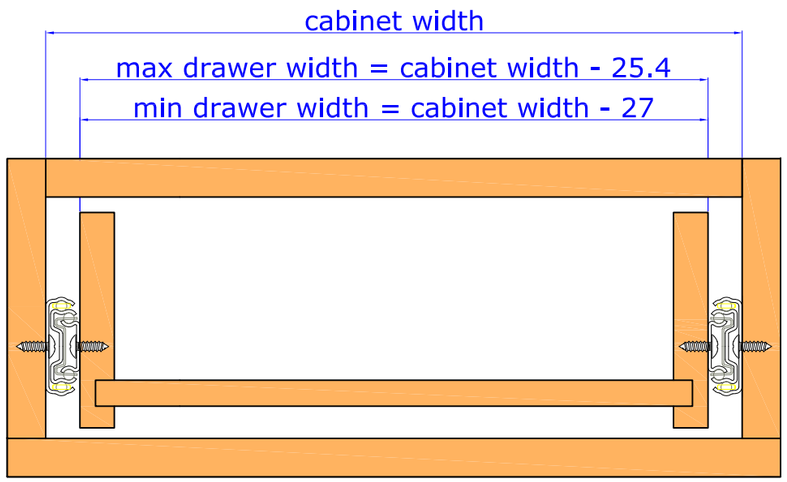

∗ max drawer width = slide length + 200 (mm)

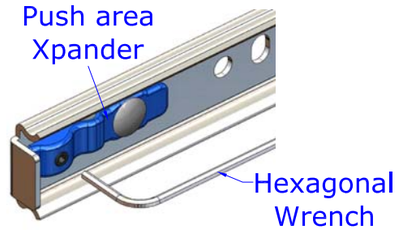

Designed to increase the touch to open area.
Fine tune (tighten or loosen) the PaX with hexagonal wrench for better surface contact, especially for wider drawers.
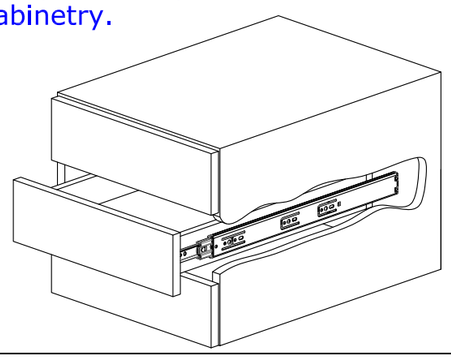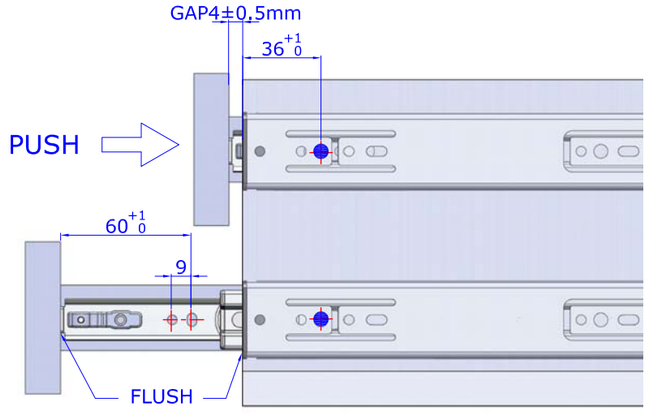
APPLICATIONS:
For use in wood pedestals,dresser, desk,casework,residential and kitchen cabinetry.